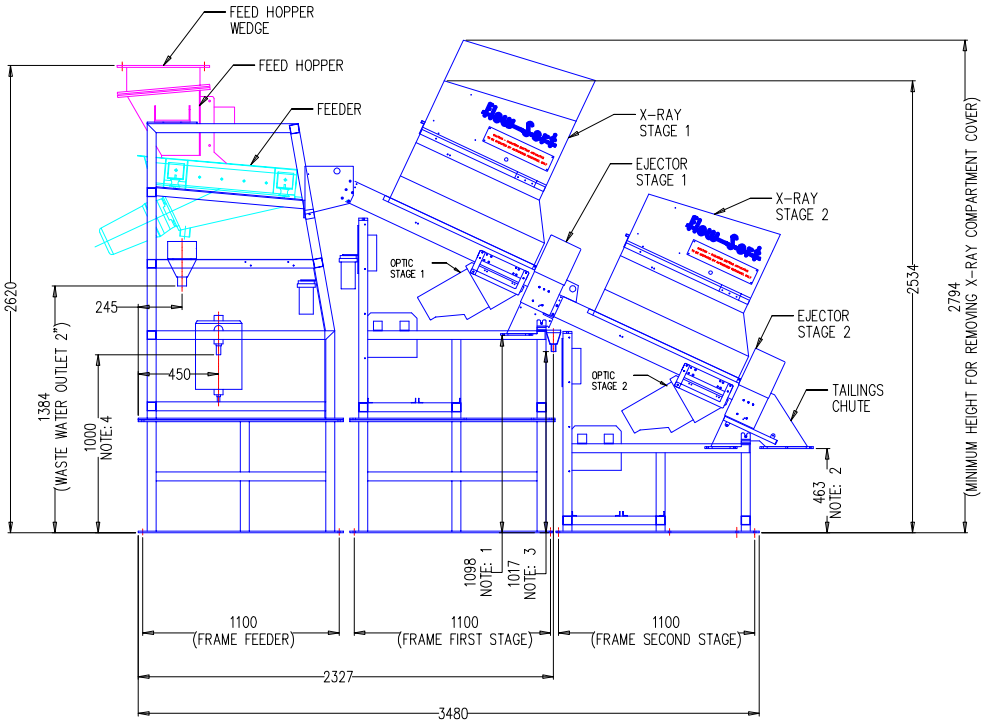

NOTE: 1
FIRST STAGE CONCENTRATE FLANGE HEIGHT

NOTE: 2
SECOND STAGE CONCENTRATE AND TAILINGS FLANGE HEIGHT

NOTE: 3
FIRST STAGE WASTE WATER 1" OUTLET

NOTE: 4
MAIN WATER CONNECTION 1"

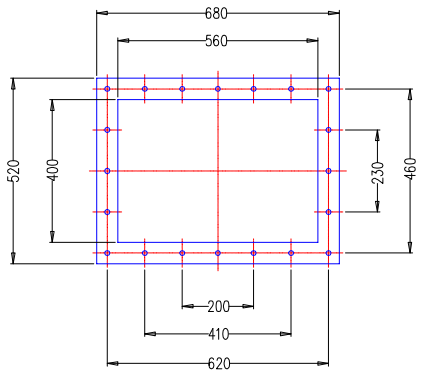

TYPICAL FEED HOPPER FLANGE
20 HOLES Ø14 FOR M12 BOLTS

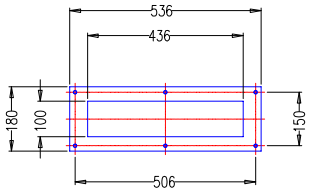

TYPICAL CONCENTRATE CHUTE FLANGE
8 HOLES Ø14 FOR M12 BOLTS

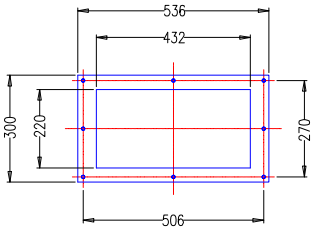

TYPICAL TAILINGS CHUTE FLANGE
8 HOLES Ø14 FOR M12 BOLTS

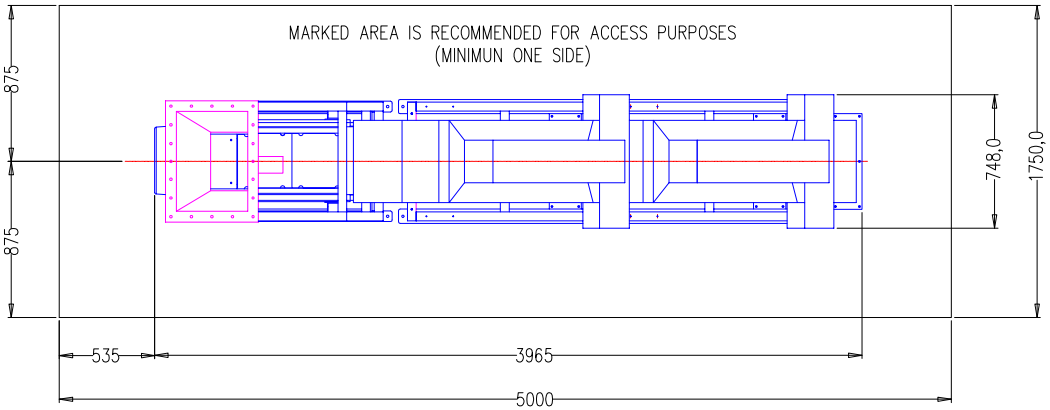

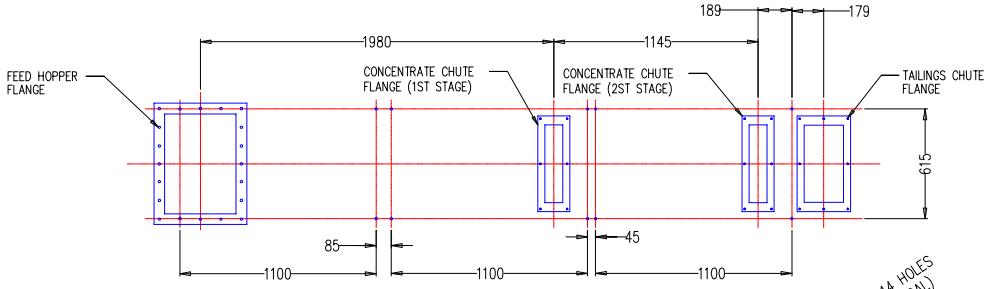

TSXR400f DW
FRAME MOUNTING HOLES WITH FLANGE POSITIONS

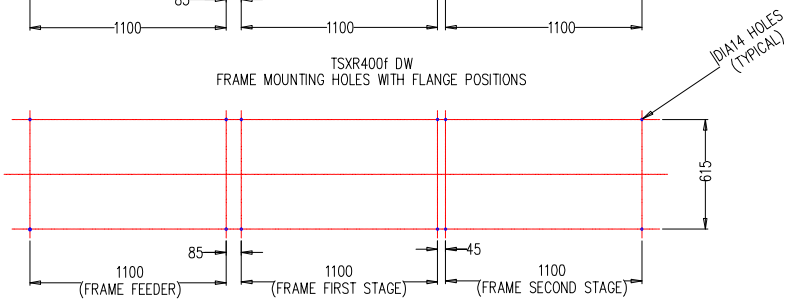

TSXR400f DW
FRAME MOUNTING HOLE POSITION

NOTE:
FOR ELECTRIC SUPPLY, WATER SUPPLY, WEIGHT OF SORTER, ETC... REFER TO FLOW SORT'S SPECIFIC SORTER SPECIFICATIONS

FOR CONTROL PANEL DETAILS REFER TO: CONTROL_PANEL-GA-01.DWG

ITEM	QTY	DRG. NO.	DESCRIPTION	MATERIAL	REMARKS

DRAWING # TSXR400f-GA-V2.DWG

THIS PRINT IS LOANED SUBJECT TO RETURN UPON DEMAND, AND UPON THE EXPRESS CONDITION THAT IT IS NOT TO BE REPODUCED OR COPIED OR INFORMATION FROM IT FURNISHED TO OTHERS OR TO BE USED IN ANY WAY DETRIMENTAL TO THE INTERESTS OF FLOW SORT (PTY) LTD/FLOW ELECTRONICS (PTY) LTD.

FLOW SORT (PTY) LTD/FLOW ELECTRONICS (PTY) LTD RESERVES THE RIGHT TO REVISE THIS SPECIFICATION AND TO MAKE CHANGES FROM TIME TO TIME TO THE CONTENTS THEREOF WITHOUT OBLIGATION TO NOTIFY ANY PERSON OF SUCH REVISION OR CHANGES

REFERENCE DRAWINGS	DRG. No.	REVISIONS	DATE	INIT.
		(3) FORMAT CHANGED	2014/10/16	PM

SCALE N.T.S.
DATE 2014/10/16
DRAWN PM
APPROVED / CERTIFIED C. M. WOLF 2014/11/26

TSXR400f DW
SORTER DIMENSIONS
AND MOUNTING DETAILS

Flow Sort (PTY) LTD.